Proteus Data Sheet

Product Code	Product Range	Issue No.	Issue Date	Issue By
U125FS	U range	C	Nov 2025	T.T.

Description

Switch Disconnector Fuse suitable for isolation.

Features

Door interlocked, insulated handle.
Padlock facility.
Robust metal enclosure.
Quad break, phase contact configuration.



General Characteristics

Standards	BS EN 60947-3. BS EN 60947-1.
Current Rating (In) at 40°C	125A
Utilization category. IEC 60947-3.	
415 VAC	125A – AC21 A. 125A – AC22 A. 125A – AC23 A.
500 VAC	125A – AC21 A. 125A – AC22 A. 125A – AC23 A.
690 VAC	125A – AC21 A. 125A – AC22 A. 125A – AC23 A.
Utilization category. A = frequent operation. B = infrequent operation.	
No. of Poles	3 switched. Bolted neutral.
Rated Insulation Voltage (Ui) AC 50-60Hz	1000V
Rated Impulse Withstand Voltage (Uimp)	8 kV
Frequency	50 / 60Hz
Fused protected Short Circuit current (Icc)	65 kA - 125A gG
Polarity	Bi-directional
Terminal Cable Capacity	50mm.sq. M8 bolted connection. 95mm.sq. with spreader box.
Terminal Tightening Torque	20Nm.
Ingress Protection (IP)	3X
Mechanical operations	10000.
Weight kg	11.9kg
Pollution Degree	3
Switching positions	O – I (OFF - ON).
Fuses	125A BS88 part 2. 111mm, centre tag.
EMC environment	A
Replacement fuse	PDD125

Proteus | Stafford Park 12 | Telford | Shropshire | TF3 3BJ
T: 01952 292001 **E:** ind@proteusswitchgear.co.uk **W:** www.proteusswitchgear.co.uk

Proteus Data Sheet

Dimensions

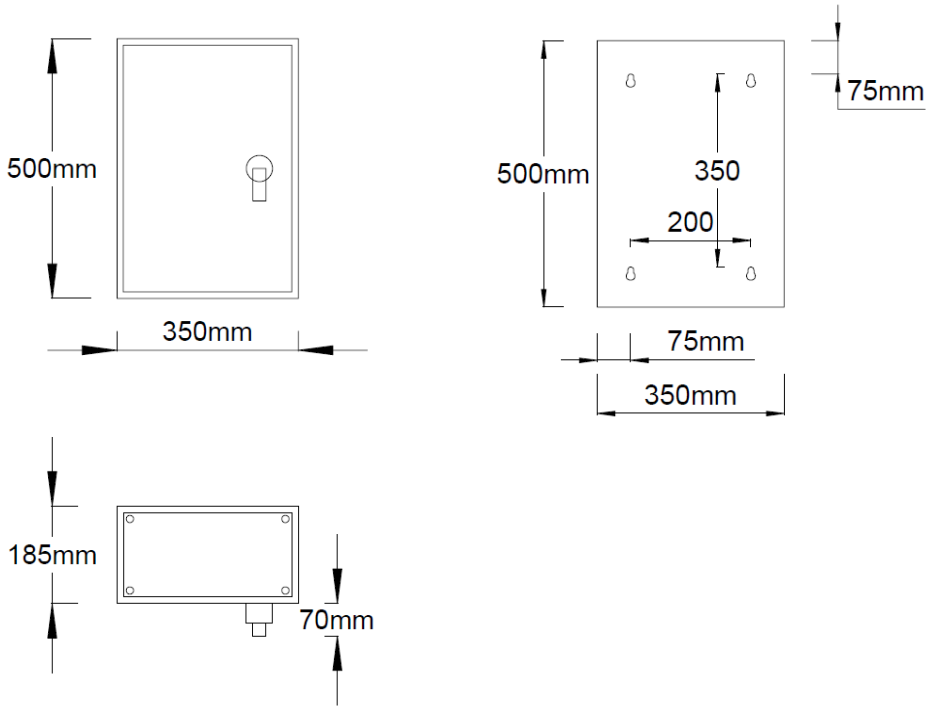

Switching

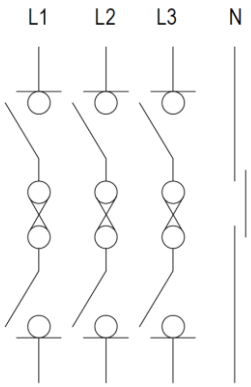

Additional information

Usage	Intended for use by skilled persons or instructed persons.
Physical	Ambient operating temperature -5 to 40 °C (Not exceeding average of 35 °C in any 24-hour period). Maximum altitude 2000m.
DC rating	Up to 600V. Refer to technical department
Installation	Service conditions: Wiring of this product must comply with current IEE regulations. Units are intended for indoor use and dry conditions and **NOT** where high levels of humidity and temperature are experienced. Note: IP rating of enclosures can be compromised if correct use of glands is not followed when installing unit.
Accessories	UCB1 - Cable spreader box. Height 200mm, width 350mm, depth 185mm. Switch gland plate fits onto end of spreader box.

Proteus | Stafford Park 12 | Telford | Shropshire | TF3 3BJ
T: 01952 292001 **E:** ind@proteusswitchgear.co.uk **W:** www.proteusswitchgear.co.uk