Proteus Data Sheet

Product Code	Product Range	Issue No.	Issue Date	Issue By
U160S	U range	C	Feb 2026	T.T.

Description

Switch Disconnector suitable for isolation.



Features

Door interlocked, insulated handle.
Padlock facility.
Robust metal enclosure.
Quad break, phase contact configuration.

General Characteristics

Standards	BS EN 60947-3. BS EN 60947-1.
Current Rating (In) at 40°C	160A
Utilization category. IEC 60947-3.	
415 VAC	160A – AC21 A. 160A – AC22 A. 160A – AC23 A.
500 VAC	160A – AC21 A. 160A – AC22 A. 160A – AC23 A.
690 VAC	125A – AC21 A. 125A – AC22 A. 125A – AC23 A.
Utilization category. A = frequent operation. B = infrequent operation.	
No. of Poles	3 switched. Bolted neutral.
Rated Insulation Voltage (Ui) AC 50-60Hz	1000V
Rated Impulse Withstand Voltage (Uimp)	8 kV
Frequency	50 / 60Hz
Fused protected Short Circuit current (Icc)	65 kA - 160A gG
Polarity	Bi-directional
Terminal Cable Capacity	50mm.sq. M8 bolted connection. 95mm.sq. with spreader box.
Terminal Tightening Torque	20Nm.
Ingress Protection (IP)	3X
Mechanical operations	10000.
Weight kg	11.3kg
Pollution Degree	3
Switching positions	O – I (OFF - ON).
EMC environment	A

Proteus Data Sheet

Dimensions

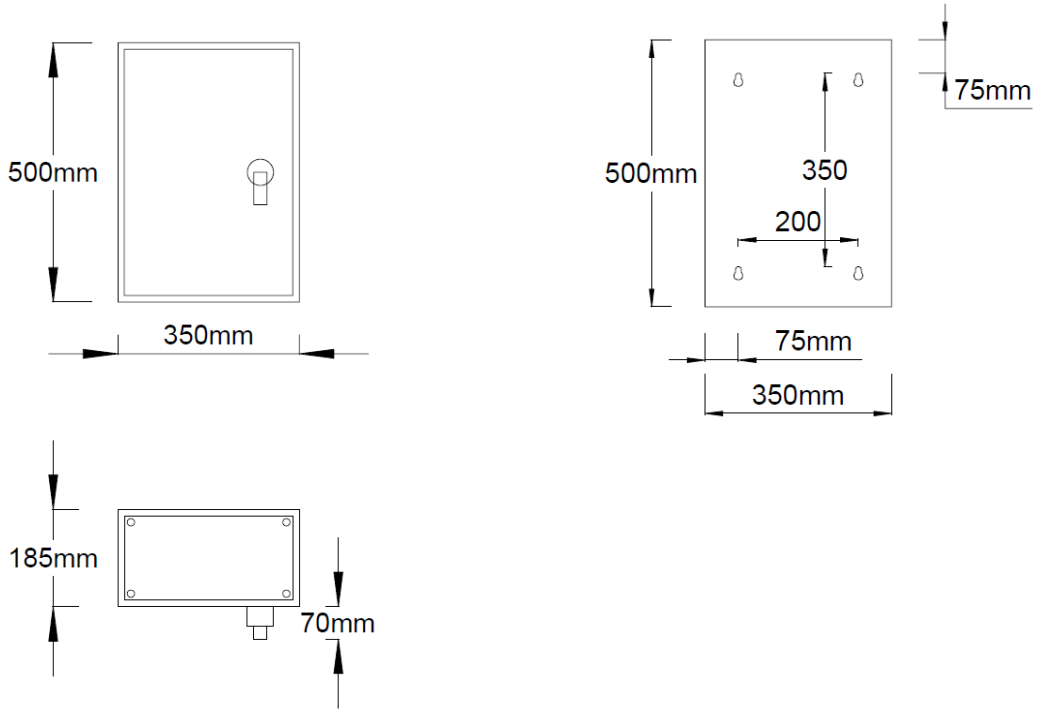

Switching

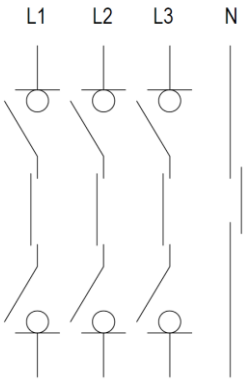

Additional information

Usage	Intended for use by skilled persons or instructed persons.
Physical	Ambient operating temperature -5 to 40 °C (Not exceeding average of 35 °C in any 24-hour period). Maximum altitude 2000m.
DC rating	Up to 600V. Refer to technical department
Installation	Service conditions: Wiring of this product must comply with current IEE regulations. Units are intended for indoor use and dry conditions and **NOT** where high levels of humidity and temperature are experienced. Note: IP rating of enclosures can be compromised if correct use of glands is not followed when installing unit.
Accessories	UCB1 - Cable spreader box. Height 200mm, width 350mm, depth 185mm. Switch gland plate fits onto end of spreader box.

Proteus | Stafford Park 12 | Telford | Shropshire | TF3 3BJ
T: 01952 292001 **E:** ind@proteusswitchgear.co.uk **W:** www.proteusswitchgear.co.uk