Proteus Data Sheet

Product Code	Product Range	Issue No.	Issue Date	Issue By
ABX12R100 (ETI)	Distribution Boards	B	12/02/2026	TT

Description

12 way, triple pole and neutral MCB board fitted with a 4 pole, 100A, 100mA, type A RCD incomer.



Features

High fault level.
Compact, space saving design.
Modern design to latest standards.

General Characteristics

Standards: Board RCD	BS EN 61439-3. BS EN 61439-1. BS EN 61008.
Current Rating	80A continuous, 100A intermittent.
Voltage Rating	400V AC
Fault Current Rating	10kA
Board type to BS EN 61439	B – accepts multi pole circuit breakers.
IP Rating	3X
Pollution Degree	3
No. of Poles	3 + neutral and earth bars.
Terminal Capacity Main Switch Disconnector	35mm.sq.
Terminal Torque	2Nm
Insulation voltage (Ui)	660V
Rated frequency (Hz)	50
Equipment Type	Fixed
Weight (kg)	9
Earth & neutral bar terminal capacity	16mm.sq.
Cable entry facility	Top gland plate removable
Door	Side hinged door (removable) with turn catch
Enclosure	1.2mm cold rolled steel with epoxy paint finish
Colour	RAL7035

Proteus Data Sheet

Product Code	Product Range	Issue No.	Issue Date	Issue By
ABX12R100	Distribution Boards	B	12/02/2026	TT

Dimensions.

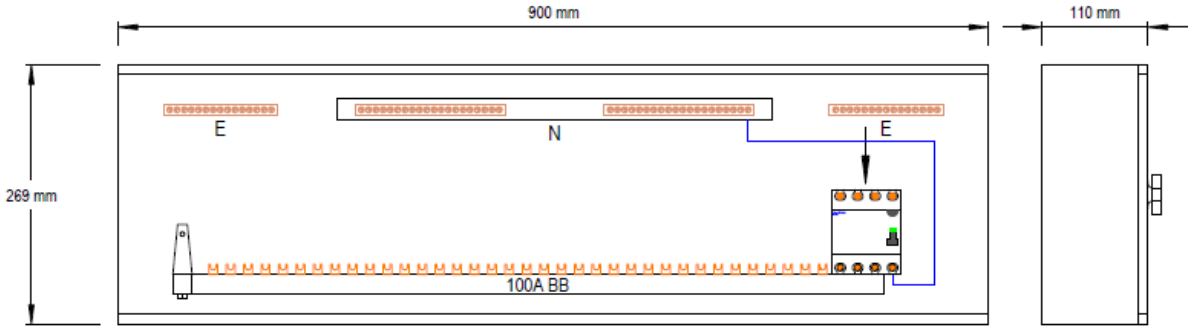

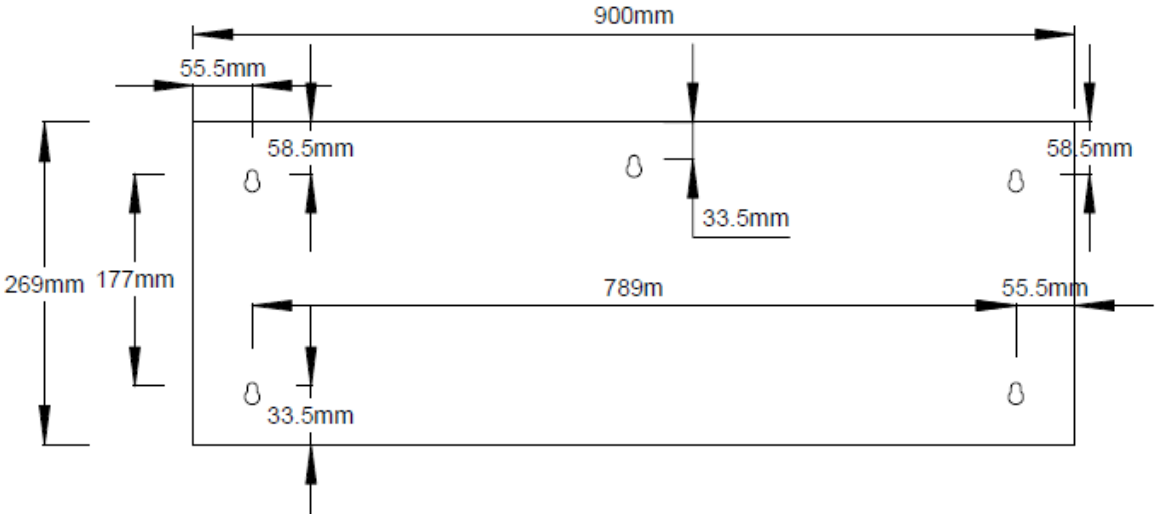

Additional information

Usage	Intended for use by skilled persons or instructed persons.
Electrical	EMC environment: Environment type A.
Installation	Service conditions: Wiring of this product must comply with current IEE regulations. Units are intended for indoor use, dry conditions and **NOT** where high levels of humidity and temperature are experienced.